DORIN	M/COMPRESSORE TIPO	CODICE	N° EM0307	REV.
	K4500CS	S6C4500	DATA 03/11/1998	00

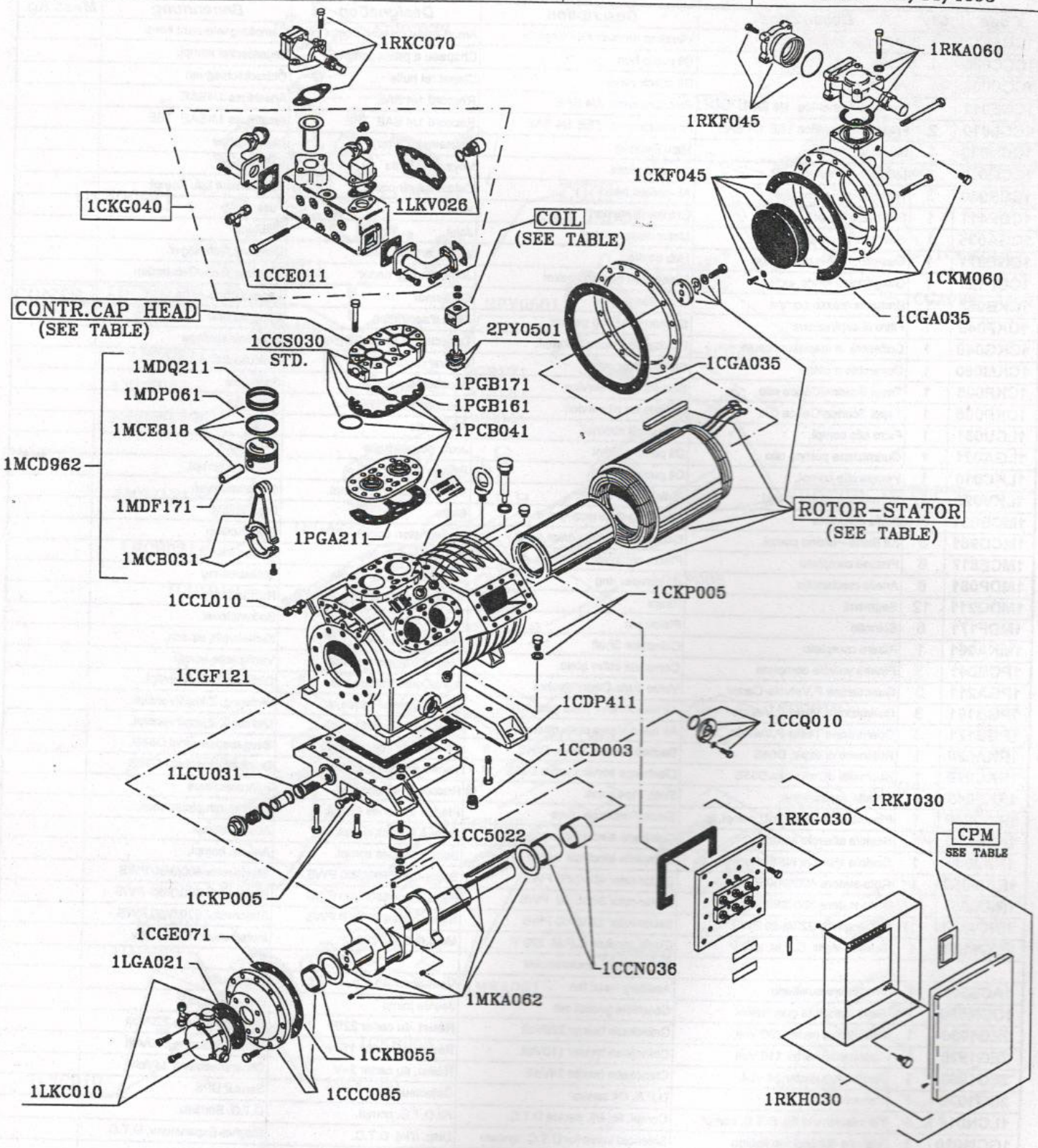

ACCESSORI – ACCESSORIES – ACCESSOIRES – ZUBEHORTEILE

LIQUID INJECTION DEVICE D.T.C.	
COMPLETE SET	1LCN015
VALVE	1GCM010
ELECTRONIC MODULE	2CE3010
TEMP. SENSOR	2CE1040

GASKET SET	1CCM060
AUXILIARI HEAD FAN	1ACS360
D.P.S. SENSOR	2CG1030

CPM	
VOLT	CODE
220	2CC1120
110	2CC3120
24	2CC2120

CRANKASE HEATER	
VOLT	CODE
220	2EG1090
110	2EG1520
24	2EG1080

SUPPLY	ROTOR/STATOR
400/3/50 PWS	1RKM052
220/3/50 PWS	1RKN032
380/3/60 PWS	1RKM057

CONTR.CAP.HEAD	
COIL SUP.	CODE
220	1LCP008
110	1LCP027
24	1LCP022

COIL	
VOLT	CODE
220	2P21010
110	2P21020
24	2P21030
24dc.	2P21040